A Target Benchmark of the Impact of Three-Dimensional Parametric Modeling in Precast Construction

Rafael Sacks, Ph.D.
Senior Lecturer
Faculty of Civil and Environmental Engineering
Technion – Israel Institute of Technology
Haifa, Israel

Charles M. Eastman
Professor of Architecture and Professor of Computing
Georgia Institute of Technology
Atlanta, Georgia

Ghang Lee, Ph.D.
Research Scientist
College of Architecture
Georgia Institute of Technology
Atlanta, Georgia

David Orndorff, P.E.
PCSC Technical Chair and Division Engineering Manager
Shockey Precast Group
Winchester, Virginia

Leading North American precast/prestressed concrete companies have invested major efforts and resources to spawn the development of intelligent parametric three-dimensional modeling software solutions for their industry. The executive decision to do so was based on the expectation that the technology would provide benefits throughout the precast business process. Initial experience with prototype modeling systems is beginning to confirm earlier expectations regarding productivity gains and error reduction, although adoption of the systems is still in its early stages. This paper enumerates the various direct and indirect benefits that have been identified and assessed to date and provides a conservative set of benchmarks that can be applied as adoption takes place. Some of the benefits have also been evaluated in economic terms, based on current industry benchmarks of productivity and error rates. Based on these assessments, an example of a large precast company's target evaluation of the economic benefit it expects to derive during the first four years of adoption is presented.

Journal of the Precast/Prestressed Concrete Institute (Submitted 5/25/2004, Accepted 2/15/2005)

The engineering and business managers of a significant group of companies within the North American precast concrete industry have recognized that adoption of advanced engineering information technologies (IT) was vital for the future success of their companies. The formation of the Precast Concrete Software Consortium (PCSC) in 2001 represented the first step in leveraging three-dimensional (3D) building modeling software to maintain their competitiveness vis-à-vis other construction technologies.

Building Information Modeling (BIM) is a generic term used to describe advanced three-dimensional CAD technology for modeling and managing buildings and information related to them. BIM models are differentiated from traditional CAD systems in that the software objects in a BIM model are intelligible to computer programs as representations of real-world building components, unlike the graphic objects in a two-dimensional CAD file. *Parametric* modeling technology, which forms the basis of BIM, offers an additional benefit: design intent can be pre-programmed, enabling the system to maintain consistency between different building parts automatically. BIM models are intended to support interactive and automated design and engineering, data storage and editing throughout a building's design, fabrication and construction life-cycle[1].

The perceived goal of the PCSC was to be integration of the wide variety of software applications in use within each company, and seamless data exchange between the various participants in the design and construction of any precast building (architects, engineers, production departments, erectors and contractors). It became apparent, however, that computer-aided drafting, as practiced in the companies' engineering departments, was unable to generate the basic design, engineering and production information that was needed for procurement, production and management software systems downstream[2]. As a result, the focus of the first

phase of the PCSC effort became research and specification of fully parametric, three dimensional, precast concrete building information modeling software[3].

The executives' decision to form and fund the PCSC was based largely on their perception of the benefits of 3D modeling and data integration within their own production facilities; they were aware of the initiatives taken in other sectors of the construction industry, the structural steel sector in particular. A number of software packages for 3D modeling and analysis had gained widespread acceptance in the structural steel industry[4], and a product data model for information exchange and software integration was already available.

At that time, despite much anecdotal evidence, no published analysis of productivity gains in the structural steel industry was available. Without such a framework, a quantitative assessment of the potential productivity gains and other benefits for precast concrete could not be made. Still, expected benefits could be identified: Improvement of engineering productivity.

- Reduction of the lead times between start of engineering design and production.
- Direct flow of information from sales and estimating to engineering.
- Elimination of the costs of rework resulting from drawing errors.
- Enhancement of customer service through better accommodation of client-initiated changes and more reliability in providing pieces for projects on short notice.
- Streamlined procurement of component parts for production.

Now, however, with the benefit of three years of research, with software development efforts currently being pursued in earnest by two independent commercial groups, and with prototype software already being tested in numerous producer companies and consultants' offices, it has become possible to make a preliminary numerical assessment of the potential benefits of these advanced engineering information technologies for the precast concrete industry.

This paper details the system features that enhance engineering productivity, establishes a benchmark and a method for measurement of productivity gains, and presents an initial estimate of the economic benefits of productivity gains and other impacts prepared by a typical large-scale integrated structural/architectural precast company. The resulting figures are intended to serve as a target guideline for companies adopting 3D modeling to measure their own progress.

BACKGROUND

An analysis of errors using case studies in precast construction[5] revealed that a significant proportion of the rework performed (pieces that must be repaired or discarded entirely and remade) results from errors and inconsistencies in the production drawings. However, the scope of that work did not include any quantitative evaluation of the economic benefits predicted due to elimination of the errors.

Sacks[8] assessed the short-term economic benefits and costs of adoption of 3D modeling in precast concrete engineering. The methodology proposed required that the potential reduction in cost and duration be estimated at the level of individual engineering design and drafting activities, but that the results be assessed collectively in the framework of a complete process (from sales and estimating through erection and handover to the owner). The checklist of benefits and costs developed is presented in Table 1 together with quantitative estimates of their impact wherever relevant. The calculations were based on a benchmark set of data describing engineering and drafting productivity in 52 existing projects, and on assessment of future performance. The latter relied upon the extensive anecdotal experience in the structural steel industry using 3D parametric modeling (Xsteel® and SDS/2® applications); on software performance tests[7] conducted using the Tekla Structures application[9] (the basis for one of the precast platforms under development), and on experience gained modeling a real building during early testing of prototype software at a precast plant. In the time since these assessments were

made, increasingly enhanced versions of the software have been installed and used in numerous plants.

Research studies of the adoption of information technologies in the construction industry in general have argued that where the benefits are neither clearly stated nor quantified, management is unwilling to make the necessary initial investments[10-13]. Construction companies generally invest very little in research and development[10], and precast concrete companies are apparently no exception. The average total investment in R&D reported by precast concrete companies for 2001 amounted to only 0.03 percent of net sales[14]; the maximum for any individual company was 0.2 percent.

The PCSC effort, on the other hand, was undertaken without crisp definitions of the benefits to individual companies. The consortium approach adopted reduced the risk inherent in an R&D project of this nature for the member companies by sharing the burden amongst multiple companies. The risk for the software companies was reduced because the background research for the new product was carried out by the PCSC with the university team it funded, and because PCSC member companies provided purchase guarantees for the development phase.

Nevertheless, individual precast companies must still make the management level decision to invest in and integrate these solutions in their business processes. The results presented here are intended to facilitate both making the investment decision and planning the adoption process.

SYSTEM FEATURES FOR PRODUCTIVITY

In order to analyze the productivity benefits of 3D building information modeling (BIM), the authors first define a baseline state and a goal state for engineering practice. In the baseline state, a representative precast company uses 2D computer-aided drafting tools to record and communicate its engineering information. In the future state, the company will have fully adopted a precast BIM system for its entire engineering department.

At the time of writing, development of BIM tools for precast engineering has progressed to the point where beta software is in place in numerous plants, but the systems are still under development and only partially deployed. For this reason, the detailed specifications of the system prepared jointly by the technical committee of the PCSC and Tekla[15] were used to represent the 'precast BIM system' goal state in the following discussion.

Engineering productivity can be enhanced by BIM in different ways for each of the activity types or tasks performed in engineering departments. Some tasks can be highly automated, while others cannot. For the productivity analysis, we classify the tasks along two axes:

a) The degree of engineering intelligence they require. Computer-aided building design research has consistently shown inverse correlation between the degree of engineering judgment, or 'engineering intelligence' required, and the degree of automation that can be applied[16-18]. (Interestingly, there appears to be no such correlation between the level of complexity of an engineering task and the possible degree of automation – highly complex engineering analyses, such as dynamic structural analysis, were among the first to be automated with computers. It is the setup of the data and interpretation of the results that requires engineering intelligence).

b) The degree of predictability of the procedure. Fixed procedures and rules can be defined for solving predictable situations, whereas unique situations require ad-hoc definition of the solution approach itself. This axis can also be thought of as the engineer's or drafter's degree of freedom or decision in defining the approach or the tools to be used in executing the task.

Figure 1 shows how the activity types are classified:

Routine tasks (in the bottom right quadrant of Figure 1) must always be performed in the same way and do not require any new engineering judgment. They are routine and repetitive. Examples include compiling bills of material (BOM), version management, recording changes,

maintaining consistency across sets of drawings, producing drawings and reports, and numbering piece-marks and pieces.

Prescribed detailing tasks entail application of standard design details to new situations (upper right quadrant). The details, and the rules for applying them, are predefined by senior staff and accumulated as company standard practice. Although they require significant engineering expertise to develop them, they require less engineering judgment each time they are used in repetitive design situations.

Expert tasks require development of original or creative solutions, or assessment and perception of unique design situations. Conceptual design, general arrangement layouts, structural analysis, design coordination of building systems, rationalization of piece-marks for production, and production scheduling, are examples (upper left quadrant).

Lastly, *setup tasks* (bottom left quadrant) are required to formalize procedures at the company level, such as defining drawing templates and precast product cross-sections. These tasks recur with decreasing frequency as BIM technology becomes more established in a company.

Automating routine tasks

If a 3D model can be compiled with information describing the project at a level of detail sufficient for fabrication and erection, then the routine tasks can be fully automated. Given a fully detailed 3D model, producing drawings per se is considered to be a routine task, because drawings are simply representations of a design model – they are not the design itself. In traditional practice, the drawings do in fact store the design information; in BIM, drawings are relegated to the role of communication devices (reports of the information) and are no longer required to store the information.

In the precast BIM system, automatic preparation of drawings, bills of material and other reports has been given high priority. Naturally, for a system to be useful across a range of companies, it must be configurable by the end users to accommodate local flavors for the way drawings are composed, annotated and dimensioned. The system specification distinguishes model views from drawing sheets, allowing a company to specify sets of rules for which views are to be generated and combined in which sheets. The rules have been initially expressed in generic terms, appropriate for all or for a range of projects and companies. The guiding principle is that information is not stored in reports, only in the model.

In existing workflows, precast companies are required to submit their designs for review by architects and engineers representing the owner. Until such time as these professionals are able to review the designs directly in the model, they will continue to review drawings and provide their feedback as markups on the drawings. As a result, precast company personnel are required to update the model on the basis of the drawings. In as far as it impacts the layout and integrity of the building design itself, the act of making the changes is considered to be either a prescribed or an expert task.

Automating prescribed detailing tasks

It is not practical time-wise for a building information modeler to compile a model with fabrication details by inserting and sizing each and every rebar, embed and block-out required in a precast piece. Therefore, predefined details must be prepared and applied in everyday practice. This is similar to the current notion of using a pre-drawn connection or part detail, stored in a company library, with only minor changes in each use. However, automation in a BIM system goes much further by virtue of the fact that a high degree of versatility can be embedded in computer library objects by using parametric and rule-based adaptation routines[7]. The BIM

system provides parametric section profiles, parts, details, connections and reinforcement layout objects.

Parametric profiles are defined by a company for each of the product types it produces. Sketching tools enable users to rapidly define cross-section geometry for profiles, by setting parametric constraints between the various arcs and vectors that compose a cross-section. One or more profiles can be inserted into a model to create a precast piece (a part). On insertion, a profile's independent dimensions may be selected or set by a user, while those defined as dependent on other dimensions are calculated automatically. For example, the spacing between stems of a double tee may be preset to be a function of its nominal width.

A detail is also composed of one or more objects, but its location and orientation are dependent on the part to which it is applied (e.g. a lifting hook on a wall panel). A connection is more sophisticated, in that its location and orientation are dependent on the two or more parts that it connects. Both details and connections can be set up so that their internal dimensions are dependent on the geometries of the parts with which they are associated.

A user may adjust the independent dimensions of a part, detail or connection at any time – the system will always react to maintain consistency by re-evaluating the dependent dimensions. For example, if a column was moved or resized, its connections, reinforcement, lifting hooks, and any beams or spandrels supported by it, and their dependent parts, would all be updated automatically. All dependent drawings can also be updated and reproduced if necessary.

The precast column-to-column splice (or column to footing connection) shown in Figure 2 illustrates this principle. The connection is parameterized, such that it adapts to the dimensions of the columns it connects, not only at the time it is inserted, but also in response to any later changes made to the columns. A user may elect to input any of its defining dimensions, or have them derived automatically according to predefined formulae.

This is true in the general case for all objects in parametric systems; relationships may be established not only within parts, but across parts, creating hierarchies of dimensional dependencies that are maintained automatically by the system. The response to changes, propagated through a design by the system, is commonly termed the 'behavior' of the parametric system. It is largely this behavior which distinguishes parametric BIM modeling systems from 2D CAD systems and provides the main productivity benefits for predefined tasks.

Rapid assembly of the precast pieces in a model and application of the connections, reinforcement and other details that are required enhances productivity; but further automation is possible. Connections and details can be applied to parts automatically on the basis of user-defined rules if structural analysis results are available. For example, a user may specify that all double tees are to be connected to spandrels using pocket connections if the load transferred is below a certain value, and the spandrel thickness is greater than some minimum width.

Supporting expert tasks

There has been a range of research efforts to explore automation strategies for design tasks, both to embed expert knowledge, and to speed the design process. In theory, given clear functional requirement definitions, and relinquishing expectations for aesthetic quality or originality, design tasks could be automated to a high degree, especially for well established and understood design tasks. Major questions have been: how to integrate automation procedures while maintaining control of critical decisions, how to deal with multiple, often conflicting functions and performances, and how to make automation "smart enough" to adjust to local conditions[i].

[i] Researchers have attempted numerous techniques, including artificial intelligence approaches such as case-based reasoning[17, 19], expert systems with knowledge-based rule processing[20], genetic algorithms[21] and hybrid approaches such as Intelligent Parametric Templates[22]. All have been frustrated by the limitations imposed by the

The current goal of precast BIM has been to support, not necessarily to fully automate, expert tasks. The software aims to automate conventions and standards (industry, company, or project-level) while enhancing the creative and problem-solving powers of the engineer with tools that enable rapid layout and exploration of design alternatives. Structural analysis tasks at both the assembly level and at the piece level are facilitated by integration of appropriate analysis software directly from the BIM model interface, as shown in Figure 3, eliminating the need for manual data entry. The following discussion focuses on layout of higher-order building assemblies.

Floor assemblies, façade assemblies and stairwell layouts are good examples of areas in which predefined sets of individual model objects representing precast pieces can be programmed to exhibit 'intelligent' behavior as cohesive assemblies. For example, the field of double-tees in Figure 4 can be manipulated as a single assembly object to provide slope for drainage, while the ability to edit each individual double tee is preserved (note that the slope induces warping in each double-tee).

Such behavior can greatly decrease the amount of time required to lay out assemblies and to edit them when changes are necessary. For example, in Figure 4, significant time is saved, and human error avoided because the exact location of each double-tee stem support along the sloped edge of the deck is calculated and drawn entirely automatically by the system, and is automatically updated in response to any change.

The following example of a façade assembly object illustrates the idea in detail. An architectural precast facade is composed of a possibly complex surface partitioned into a set of panels separated by joints between them, with associated regions with different materials,

difficulty of elicitation of expert knowledge, insufficiently intelligent artificial intelligence techniques, economic reality, legal liability issues, limits on economical computational power, and others.

thickness and finishes, with fenestration at some specified layout, with a possibly complex pattern of reveals, bull noses, sills, and surface treatments.

The facade must include potentially complex joints with other façade elements, including non-precast elements. On the back side, the façade must carry the necessary supporting connections, indents for columns, be adequately reinforced, and carry specified insulation, embeds for electrical and other utilities. Facades are complex assemblies, with important aesthetic and visual criteria. Typically, a medium sized architectural façade project (see Table 2) requires from 28.3 to 33.4 hours/1,000 ft^2 (305 to 360 hours/1,000 m^2) to draw using CAD[8].

The *PCSC BIM software specification*[15] calls for functionality to allow the layout of a façade as a set of reference surfaces. Each surface can incorporate unlimited offsets and change of thickness. The façade surface is partitioned into panels by joints, while each panel may be defined by regions within it, each with different materials, surface treatments and colors. Openings in the façade require detailing around their perimeter for waterproofing and aesthetic reasons.

The façade layout design consists of parametric positioning of joint lines that identify the seam details, along with any reveals and special surface treatments along the seam. Panels are defined by specifying the joints that bound them. Joint details are selected from a predefined library, or one composed for the current project, as shown in Figure 5. The joint geometries are automatically applied to the panels, creating 3D solids. The joint information also includes bill of material data, allowing these to be accurately derived.

Window assemblies are predefined in a company library and then customized as needed for each project. They are embedded as predefined parametric assemblies, as shown in Figure 6. Sill, arch or other header and jamb conditions are specified, so that they are automatically aligned with the window. If the window moves, they all do. Like the joints, they modify the 3D model of

each precast panel. The precast design components of bills of material for the window assembly are included.

Other capabilities provide means to deal with surface treatments (brick coursework, special mixes, tiling, reveals, bull-noses and other patterns). These capabilities are not simply layout operations, but rather automatically update themselves as other parts of the design change. Later, reinforcing, connection elements between the panels and the structure are laid out, insulation layers and mechanical/electrical embeds, if needed, are added. From the 3D model, piece drawings of each panel can be automatically generated, including all of the detail dimensioning, placement of embedded elements and other details needed for fabrication, along with the piece-level bill of materials. It is expected that these capabilities will tremendously facilitate the definition and layout of precast concrete facades, and allow more complex facades to be developed.

Customization

An important aspect of providing productivity enhancements is that the system should not restrict users to predetermined solutions over which they have no control. The ability to customize the way in which a 3D BIM system functions is essential. Customization is achieved by providing tools at two levels:

- specialized parametric modeling tools that enable users to generate the profiles, parts, details, and connections that they need to represent the kinds of precast building parts they produce, together with the full parametric behavior that those parts must exhibit.

- basic application programming interfaces (APIs) that software programmers can use to build specialized applications, which may also interface with or directly run other applications.

BENCHMARKING AND MEASURING ENGINEERING PRODUCTIVITY

Measurement of engineering productivity is necessary for assessing if BIM systems provide tangible benefits, and if so, for documenting benefits so as to support effective adoption and implementation. The adoption process is complex, involving personnel and role changes, intensive re-training, reorganization of engineering departments, alignment of company IT procedures, and changed relationships with clients. To succeed, adoption should be carefully planned and managed, which requires periodic measurement of progress.

Progress can be compared to an internal plan, to the best practice progress achieved by other companies, or to previous practices within the same company. For each, benchmarking of existing productivity levels before adoption of 3D BIM is desirable. While the most useful benchmark is that measured before adoption, given that most companies will introduce systems gradually, benchmark measurements of existing 2D CAD based work processes can still be made after adoption has begun.

Productivity assessment in this case is the labor productivity of engineering personnel and involves measurement of labor input and output. The gross number of hours that engineers and drafters work to produce the design and production information for precast projects is a good basis for assessment of input (cost is rejected as a measure due to its dependence on wage rates and because the costs of equipment and office overheads are neither fixed nor negligible). Engineering output is sometimes measured by the contract value of a project, but value is problematic in this case because contract prices differ for different projects and companies. Instead, the area of building designed (floor area of structural projects, façade area of architectural projects) is a more consistent and company neutral measure of output.

Productivity differs substantially in relation to the type, size and complexity of a project. Benchmarking is only meaningful when like projects are compared. Sacks[8] classified projects by

type and size as shown in Table 2, and adopted the piece to piece-mark ratio (PMR) as a measure of complexity for architectural projects (more complex projects have PMR < 2, while simpler projects have PMR ≥ 2). If benchmarking is to be used across company boundaries, the same classification should be used for all companies.

Changes in productivity are not expected to be uniform across all the sub-activities included under the title 'engineering'. The deployment of 3D BIM in precast concrete design and engineering is predicted to have greatest impact on the straightforward and predefined tasks (as defined in Figure 1), which are largely performed today by drafting personnel, but with significant but less productivity impact on the expert tasks, generally performed by engineers. Moreover, changes are likely to the process itself. A new role, termed 'building modeler', may evolve, supporting not only the design process, but possibly sales, production and scheduling as well.

For these reasons, hours should be recorded for each activity performed according to a classification of activity types defined for each of the existing (2D CAD) and new (3D BIM) processes. Table 3 presents a listing of activity types compiled in consultation with the engineering managers of four companies that have begun adoption. In the 3D BIM process, the checking activities (marked with asterisks) are different to those performed for 2D CAD in that they are performed directly on the model before drawings are produced. Some checks, such as checking for physical interference between objects, are themselves automated.

Tables of benchmark productivity figures for existing 2D CAD practice for both architectural and structural projects, listed for these activity types (Table 3) and project classifications (Table 2), have been compiled on the basis of figures provided by three precast companies covering 52 projects[8]. The data is summarized in Table 4.

The method outlined above for benchmarking and measuring engineering productivity can be implemented in any company simply by requiring each engineering department employee to record the hours worked each week for each listed activity type on time sheets associated with each project. That data can then be compiled at any stage according to project classifications to monitor adoption progress compared to plan or compared to performance benchmarks established by other companies. Assuming that the raw data records are kept and that the date of each timesheet is noted, then the data will also enable extraction of the engineering lead-time to production, of overall activity durations, and of other measures useful for assessing impacts other than productivity.

BASIC 3D MODELING PRODUCTIVIY

At the time of the first assessment of short term economic impact[8], the activity durations required to model and detail a precast structure were estimated on the basis of trials performed during initial training on BIM software. In the interim, precast companies have begun pilot use of development phase releases of the software. Users have gained experience, and actual projects have been modeled by different precast companies using BIM tools (all at the assembly level, some at the detailed design level, none yet at the piece detail level). A sampling of six such projects from three different companies is provided in Table 5; three are shown in Figure 7 (a), (b) and (c) respectively.

Based on this experience, it can be seen that the time required to model structural projects at a level of detail suitable for erection drawings (including initial connections) ranges from 0.46 to 0.55 hours per 1,000ft^2 (5.0 to 5.9 hours per 1,000m^2)(excluding buildings Y and OO2, which did not include connections. Building Y is also atypical – it has two very large wings, with the second being a modified mirror image of the first, with the result that it was modeled extremely efficiently in the software). The drawings themselves can be produced automatically (at some

level of production quality) at any point in the process. For sake of comparison, producing erection drawings for similar buildings currently requires in the order of 16, 4.8 and 2.4 hours per 1,000ft^2 (172, 52 and 26 hours per 1,000m^2) for small, medium-sized and large structural projects respectively[8].

These 3D modeling results are indicative only of the time required to perform the initial modeling of a structure - laying out vertical and horizontal grid control planes, placing column, floor and façade assembly objects, laying out any pieces that are not members of repetitive arrays, and applying connections. The times reported do not include detailing of the finishes and reinforcement, and all reporting (drawings and BOM). As such, they do not yet reflect the impacts of the system features detailed earlier in this paper. No data is available yet concerning the costs or the longer term impacts, although users have noted that the 3D models were immediately useful for sales and conceptual design coordination purposes.

Based on the refined productivity assessment for the 3D modeling activity, and detailed market share data, the short term (four year) economic impact of adoption has been assessed by a large sized precast company. These figures represent the targets set for the company by management. The economic model for calculating the expected benefits and costs is provided, together with the values assumed for each of the variables, in Appendix A (note that the productivity enhancement figure is a conservative estimate, especially in the case of shop drawings, where no detailed measurements have yet been made; comparable assessments for structural steel fabrication shop drawings suggest that greater improvements may be possible).

In order to project the long term benefits of 3D modeling, we have proposed a four year adoption scenario for a typical company, in which, 25 percent of workstations are replaced in the first year, 50 percent more in the second, and by the third year, all CAD stations have been replaced. The resulting expected net benefits are shown in Table 6. At this time, engineering

productivity gains provide the most significant benefit. The figure of $40,000,000 is an arbitrary estimate of the cost of sales of a medium-to-large sized US precast producer. Similarly, the gain in sales volume through years 2, 3 and 4 is hypothetical. Note that all the figures relate to cost savings, not to profits.

Gains that flow from increased sales volume are also significant, although it is likely to prove more difficult to associate volume increases directly with 3D modeling (other unrelated influences may work in parallel with reduced lead-times, reduced costs and better service to increase sales). If the benefits ascribed to increased sales volume are calculated using current overhead and capacity utilization rates reported industry wide[14], the results are as shown in the last row of Table 6.

CONCLUSIONS

The main conclusions that can be drawn from this study are that:

1. The directly measurable benefits of Building Information Modeling (BIM) for the precast concrete industry are expected to be significantly reduced engineering costs and costs of rework due to errors. Additional and potentially more significant benefits are enhanced cost estimating accuracy, drastic reduction in engineering lead-time, improved customer service and support for automation in production.
2. While the net direct benefit will differ from company to company, the target for a large company from productivity gains and error reduction should be in the order of 2.3 percent of total project cost (estimating through erection and hand-over to owner). Potential additional net indirect benefits are in the order of 1.9 percent, so that potential total benefit is estimated to be in the range of 2.3 to 4.2 percent of total project cost.

3. The costs include the direct costs of BIM workstations, training, setup of piece and connection libraries, management of the adoption phase, and lost productivity during adoption.
4. A calculation of the expected cash flow over the first four years from adoption, prepared by a typical large integrated architectural/structural precaster, indicates that the decision to invest in BIM technology should be straightforward from a purely economic standpoint.

Naturally, since BIM represents a paradigm shift from the use of 2D computer-aided drafting, the transition is likely to involve personnel issues. It is also likely to present the opportunity for rethinking, and possibly re-engineering, existing workflows and information flows in both engineering and in production. Companies should therefore prepare carefully considered strategies and working plans for the adoption phase, and should implement monitoring procedures to enable benchmarking their progress internally and in comparison with other companies' performance.

As BIM becomes more common through the industry, the need for data exchange and software integration is likely to become more pronounced, thus coming full circle to the initial rationale behind establishment of the PCSC. Development of a Precast Building Data Model for the exchange and integration of precast design and engineering data with other plant and project-related functions is likely to become a priority of the broader precast concrete industry. In addition, the availability of BIM systems with open API's is likely to provide fertile ground for the development of a wide range of applications, some of which will continue to explore the boundaries of far-reaching automation.

ACKNOWLEDGMENT

This work was funded in part by the Precast Concrete Software Consortium, a consortium of major precast producers from Canada and the United States (http://dcom.arch.gatech.edu/pci2). The contributions of the members of its technical committee task groups are gratefully acknowledged, particularly Dave Mahaffy, Mike Hutchinson and Skip Wolodkewitsch. The authors sincerely appreciate the PCI JOURNAL reviewers' enthusiastic and constructive comments on the original manuscript.

REFERENCES

1. Laiserin, J. Comparing Pommes and Naranjas, The LaiserinLetter, Issue 15, December 16, 2002. <http://www.laiserin.com/features/issue15/feature01.php>, last accessed December 15, 2003.
2. Eastman, C. M., and Augenbroe, G., *PCI Study: Design Computing Research Report*. 2000, Georgia Institute of Technology: Atlanta.
3. Eastman, C.M., Sacks, R., and Lee, G., *Software Specification for a Precast Concrete Design and Engineering Software Platform*. 2001, Georgia Institute of Technology: Atlanta, GA, USA.
4. CIS/2. CIS/2@GT. <http://www.coa.gatech.edu/~aisc>, last accessed 20-1-2004.
5. Sacks, R., Eastman, C.M., and Lee, G., *"Process Improvements in Precast Concrete Construction Using Top-Down Parametric 3-D Computer-Modeling."* Journal of the Precast/Prestressed Concrete Institute, V.48, No. 3, 2003, pp. 46-55.
6. Choi, C.K., and Kim, E.D., *"Top-down geometric modeling of buildings on network database."* Computer-Aided Design, Butterworth-Heinemann., V.25, No. 8, 1993.
7. Sacks, R., Eastman, C.M., and Lee, G., *"Parametric 3D Modeling in Building Construction with Examples from Precast Concrete."* Automation in Construction, V.13, 2004, pp. 291-312.
8. Sacks, R., *"Evaluation of the economic impact of computer-integration in precast concrete construction."* ASCE Journal of Computing in Civil Engineering, V.18, No. 4, 2004, pp. 301-312.
9. Tekla. Tekla Structures v10.2. <http://www.tekla.com/user_nf/default.asp?r=0&site=33>, last accessed November 17th, 2004.

10. Andresen, J., Baldwin, A., Betts, M., Carter, C., Hamilton, A., Stokes, E., and Thorpe, T., *"A framework for measuring IT innovation benefits."* ITcon International Journal of IT in Construction, V.4, 2000, pp. 57-72.

11. Marsh, L., and Flanagan, R., *"Measuring the costs and benefits of information technology in construction."* Engineering, Construction and Architectural Management, V.7, No. 4, 2000, pp. 423-435.

12. Mitropoulos, P., and Tatum, C.B., *"Technology Adoption Decisions in Construction Organizations."* ASCE Journal of Construction Engineering and Management, V.125, No. 5, 1999, pp. 330-338.

13. Love, Peter E.D., and Irani, Zahir, *"Evaluation of IT costs in construction."* Automation in Construction, V.10, 2001, pp. 649–658.

14. Brummet and Olsen, LLP, *Annual Financial and Cost Data Survey, Fiscal 2001*. 2002, PCI Precast/Prestressed Concrete Institute: Chicago. p. 69.

15. Eastman, C.M., Sacks, R., Lee, G., and Orndorff, D., *PCSC Inform Task Report in Support of Development of Precast Concrete Design and Engineering Software*. 2003, Georgia Institute of Technology: Atlanta, GA, USA.

16. Galle, P., *"Towards integrated, "intelligent", and compliant computer modeling of buildings."* Automation in Construction, V.4, 1995, pp. 189-211.

17. Oxman, R.E. *Case-based reasoning in knowledge-based design*. in *European Symposium on Management, Quality and Economics in Housing and other Building Sectors*. 1991. Lisbon, Portugal.

18. Gero, J. S., *"Artificial intelligence in computer-aided design: Progress and prognosis."* Computer-Aided Design, V.28, No. 3, 1996, pp. 153-154.

19. Flemming, U., and Woodbury, R., *"Software Environment to Support Early Phases in Building Design (SEED): Overview."* ASCE Journal of Architectural Engineering, V.1, 1995, pp. 147-152.

20. Maher, M.L., and Fenves, S.J., *HI-RISE - an expert system for the preliminary structural design of high rise buildings*, in *Knowledge engineering in Computer-Aided Design*, J.S. Gero, Editor. 1985, North-Holland: Amsterdam. p. 125-135.

21. Khajehpour, S., and Grierson, D.E. *Multi-criteria conceptual design using adaptive computing*. in *Proceedings of the 1999 Structures Congress 'Structural Engineering in the 21st Century'*. 1999. New Orleans, LA, USA: American Society of Civil Engineers, Reston, VA, USA.

22. Sacks, R., Warszawski, A., and Kirsch., U., *"Structural Design in an Automated Building System."* Automation in Construction, Elsevier Science B.V., V.10, No. 1, 2000, pp. 181-197.

23. LEAP. Integrated Solutions. <http://waseda.lunarpages.com/~leapso2/index.php?section=integratedSolutions>, last accessed February 19, 2004.

APPENDIX A

ECONOMIC IMPACT ASSESSMENT METHOD AND DATA.

The annual benefit B_k and the annual cost C_k are estimated according to the following model[8].

$$B_k = a_k \sum_i \sum_j CF_{ijk}(p_{ij} + e) + \left(\frac{\sum_i \sum_j CF_{ijk} - C_P}{C_C - C_P}\right) p_o \sum_i \sum_j CF_{ijk} \quad \text{(A1)}$$

$$C_k = n\left(\frac{\sum_i \sum_j CF_{ijk}}{C_P}\right)(a_k \overline{P} C_{3D} - a_{k-1} C_{CAD}) + CI_k \quad \text{(A2)}$$

$$\overline{P} = \frac{\sum_i \sum_j CF_{ijk} P_i}{\sum_i \sum_j CF_{ijk}} \quad \text{(A3)}$$

If no distinction is made between sales volumes for different project sizes and types, these reduce to:

$$B_k = a_k CF_k (p_{ij} + e) + \left(\frac{CF_k - C_P}{C_C - C_P}\right) p_o CF_k \quad \text{(A4)}$$

$$C_k = n\left(\frac{CF_k}{C_P}\right)(a_k \overline{P} C_{3D} - a_{k-1} C_{CAD}) + CI_k \quad \text{with} \quad \overline{P} = P_i \quad \text{(A5)}$$

This is the form used in the sample calculation. The variables and the values assumed are explained in Table A1.

Table A1: Variables used for economic assessment.

Variable	Definition	Value used for calculation
a_k	level of adoption in any given year k, ranging from 0 to 1	According to the company adoption plan, a_1 = 0.25, a_2 = 0.5, a_3 = 1, a_4 = 1
i	one of (architectural, structural);	No distinction was made between small and large and between architectural and structural type projects.
j	one of (small, medium, large);	
k	the number of years after initial investment in IT	k = 1, 2, 3, 4
CF_{ijk}	target annual cost of sales for projects of type i and size j in year k attributable to IT adoption	CF_1 = \$40,000,000; CF_2 = \$42,000,000; CF_3 = \$44,100,000; CF_4 = \$46,305,000; representing annual growth of 5 percent.
p_{ij}	engineering productivity gain for projects of type i and size j	0.0216 (2.16 percent) based upon engineering representing 5.4 percent of total costs, with an overall 40 percent productivity gain (zero productivity gains in engineering analysis and design and in coordination tasks, and productivity gains of 25 percent in assembly drawing and of 70 percent in shop ticket drawing).
e	error reduction gain for projects of type I and size j	0.0045 (0.46 percent) based upon company history showing cost of combined engineering and manufacturing errors consume about 1 percent of erected sale price; judge that about 75 percent of that is directly attributable to engineering itself; and 60 percent of errors will be eliminated by BIM.
C_P	present cost of annual sales for all projects	\$40,000,000
C_C	cost of sales assuming full utilization of production and erection resources	\$59,701,500; assuming present cost of sales represents ≈67 percent of capacity utilization.
p_o	maximum potential overhead gain	5.8 percent; assumes overhead includes R&D, manufacturing overhead, equipment costs, estimating & sales expenses, and general & administrative expenses. Of the total overhead of 24.9 percent reported[14] industry wide for capacity utilization of 67 percent, manufacturing overhead (14.9 percent) is assumed to rise moderately in relation to sales growth, while all other overheads (10 percent) are assumed to remain constant as volume increases.
P_i	Relative productivity of parametric modeling workstation to standard CAD workstation	167 percent; i.e. six BIM workstations will replace 10 CAD workstations.
C_{3D}	predicted annual cost of 3D parametric modeling workstations	\$15,000
C_{CAD}	current direct annual cost of CAD/engineering workstations	\$4,000
n	base number of existing engineering and drafting workstations	18
CI_k	annual indirect costs for BIM support	CI_1 = \$30,000; CI_2 = \$31,500; CI_3 = \$33,100; CI_3 = \$34,800; assumed covered by 50 percent of a mid-level manager's salary, increased 5 percent per year.

Table 1. The benefits and costs of adoption of 3D modeling in precast engineering[8].

Benefit or Cost	**Description**	**Estimate**
Improved project definition at time of sales	Early modeling and presentation of project proposals to clients result in better-defined projects.	
Enhanced cost estimating accuracy	Projects can be estimated with more detail and accuracy and at lower cost both at early stages and for procurement, than can be done at present, resulting in reduced contracting risk.	
Reduced cost of engineering	The range of productivity gains for architectural projects are engineering (46-51 percent), drafting (80-84 percent), and for structural projects: engineering (35-46 percent), drafting (82-84 percent).	2.6-6.7 percent of total project cost (including erection)
Reduction of design and drafting errors	Assessment of data for a sample of over 32,500 pieces from numerous companies revealed engineering related errors in: assembly design (0.19 percent of total project cost), drafting (0.12 percent), piece detailing (0.08 percent) and design coordination (0.18 percent).	0.40-0.46 percent of total project cost
Improved customer service	Significantly shortened lead-time between contract and production, and increased responsiveness to clients' requests for changes.	
Streamlined logistics	Integration of 3D BIM models with Enterprise Resource Planning Systems, reducing internal communication costs and errors, increased management control and smaller inventories of components and finished pieces.	
Production Automation	Provision of data for laser layout projection systems and for computer controlled machines such as rebar benders, welding machines, milling and/or laser cutting machines for production of styrofoam mold parts, wire mesh bending machines and robotic applicators for sand-blasting and acid-etching. Automation of cranes and other piece-handling equipment.	
Reduced overhead cost rates	Reduced overhead cost rate per unit of product, as a result of increased capacity utilization due to increased sales. This excludes any direct reduction of overhead costs. (At 67 percent capacity utilization, average industry overhead rates reported are 24.9 percent[14].)	
Direct costs of 3D BIM stations	Direct costs for purchase of software, hardware, installation, training, maintenance contracts, and for salary growth for employees trained to operate the systems. The estimate is an annual equivalent cost per workstation based on a five-year cycle.	$11,390 to $20,165
Replacement cost of existing systems	This annual benefit is derived through replacement of existing CAD stations.	$3,488 to $5,774 per station
Indirect costs through the adoption phase	Management resources and time, personnel turnover, reduced productivity during adoption (at the start of the learning curve), business process re-engineering and organizational restructuring.	

Table 2. Precast project classifications.

Project Type	Size Measure	Small	Medium	Large
Architectural	Façade area (ft^2)	≤ 10,000	10,001 - 100,000	> 100,000
	Piece Count	≤ 100	101 – 750	> 750
Structural	Floor area (ft^2)	≤ 75,000	75,001 - 300,000	> 300,000
	Piece Count	≤ 250	251 – 1,000	> 1,000

Table 3. Activity types for measuring productivity.

	2D CAD	3D BIM
Job Coordination	✓	✓
Engineering Design	✓	✓
3D Modeling		✓
Erection Drawing	✓	
Erection Drawing Annotation		✓
Erection Drawing Checking	✓	✓*
3D Detailing and Checking		✓
Production Drawing	✓	
Production Drawing Annotation		✓
Production Drawing Checking	✓	✓*
BOM Preparation	✓	

Table 4. Current Net Hours Worked.

Project Type \ Project Size	Small	Medium	Large
Structural Projects (hours per 1,000 ft^2 floor; [hours per 1,000 m^2 floor])	33.5 [361]	12.7 [137]	7.2 [77.3]
Architectural Projects (hours per 1,000 ft^2 façade; [hours per 1,000 m^2])	113 [1216]	37.5 to 39.8* [404 to 428]	34.6 to 35.8* [372 to 385]

* low to high complexity

Table 5. Precast buildings modeled in 3D BIM software.

Code	Description	Floor area (ft^2) [m^2]	Size Classification	# Pieces	# Piece Marks	Piece Mark Ratio	Modeling Hours	Hours per 1,000 ft^2 [1,000 m^2]
QE2	Three level parking deck	137,000 [12,728]	Medium	567	242	2.3	75	0.55 [5.9]
COL	Parking deck	60,672 [5,637]	Small	249	68	3.7	32	0.53 [5.7]
Y	Office building with parking basement and steel atrium structure	480,320 [44,623]	Large	1700	125	13.6	34	0.07 [0.8]
X2	Office building structure	272,736 [25,338]	Medium	930	396	2.3	127.5	0.46 [5.0]
PEN	Office and parking building with facades	167,918 [15,600]	Medium	976	-	-	87.5	0.52 [5.6]
OO2	Parking deck	285,000 [26,477]	Medium	563	300	1.9	60	0.21 [2.3]

Table 6: Benefits and costs assessed by a large precast company.

	Year 1	**Year 2**	**Year 3**	**Year 4**	**Notes**
Annual Predicted Cost of Sales	$40,000,000	$42,000,000	$44,100,000	$46,305,000	CF_k
Direct Benefits					
Engineering Productivity	$216,000	$680,400	$952,560	$1,000,188	$a_k*CF_k*(p)$
Error reduction	$45,000	$141,750	$198,450	$208,373	$a_k*CF_k*(e)$
Costs					
Equivalent CAD workstations required	18	19	20	21	$n*CF_k/C_p$
CAD stations saved	0	5	15	21	$n*CF_k/C_p*a_{k-1}$
3D modeling workstations	3	9	12	13	$n*CF_k/C_p*a_k*P_i$
Added workstation costs	$45,000	$115,000	$120,000	$111,000	$n*CF_k/C_p*a_k*P_i*C_{3D}$
Indirect 3D costs	$30,000	$31,500	$33,100	$34,800	CI_k
Net Benefits					
Net annual direct benefit	$186,000	$675,650	$997,910	$1,062,761	
Indirect Benefit					
Potential annual volume/overhead gain	$0	$247,291	$532,294	$859,492	$(CF_k-C_p)/(C_c-C_p)*p_o*CF_k$

LIST OF FIGURES

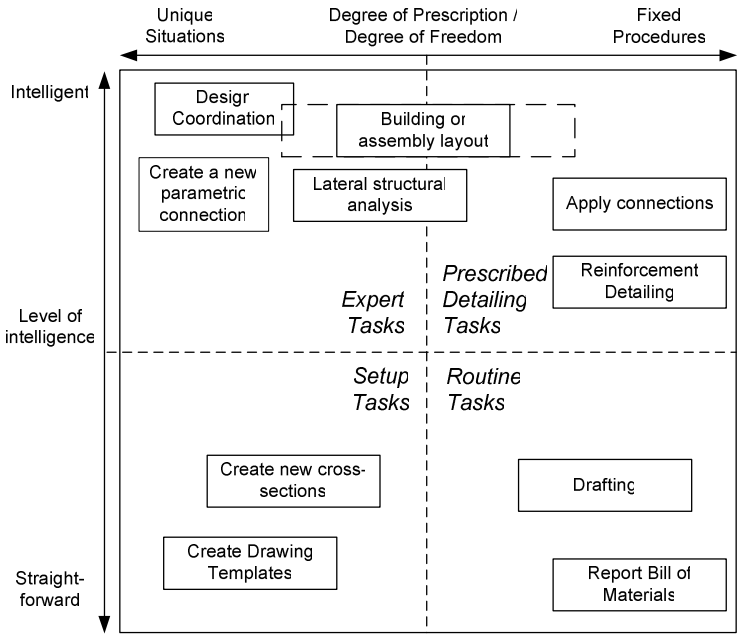

Figure 1. Classification chart of engineering design tasks.

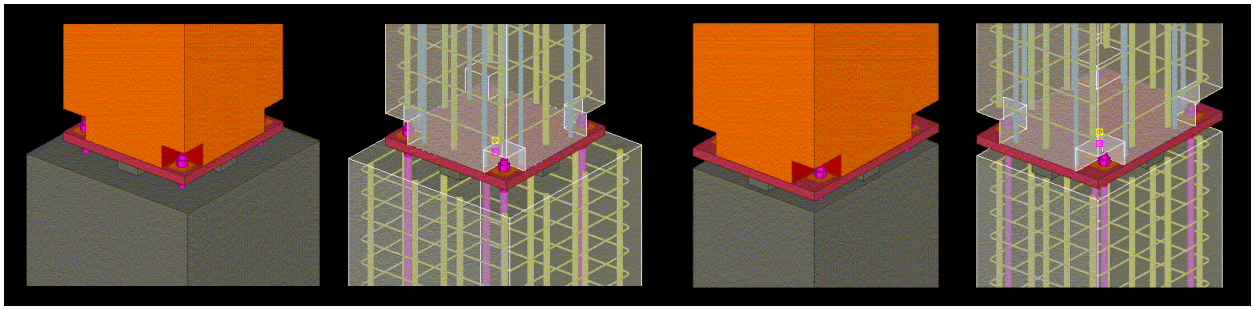

Figure 2. Column to column splice.

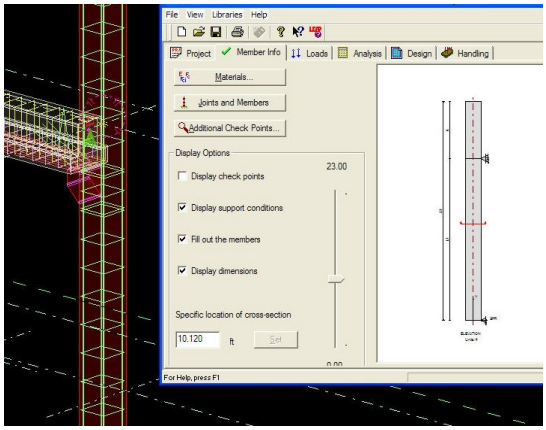

Figure 3. Structural analysis and design within the BIM model interface[23].

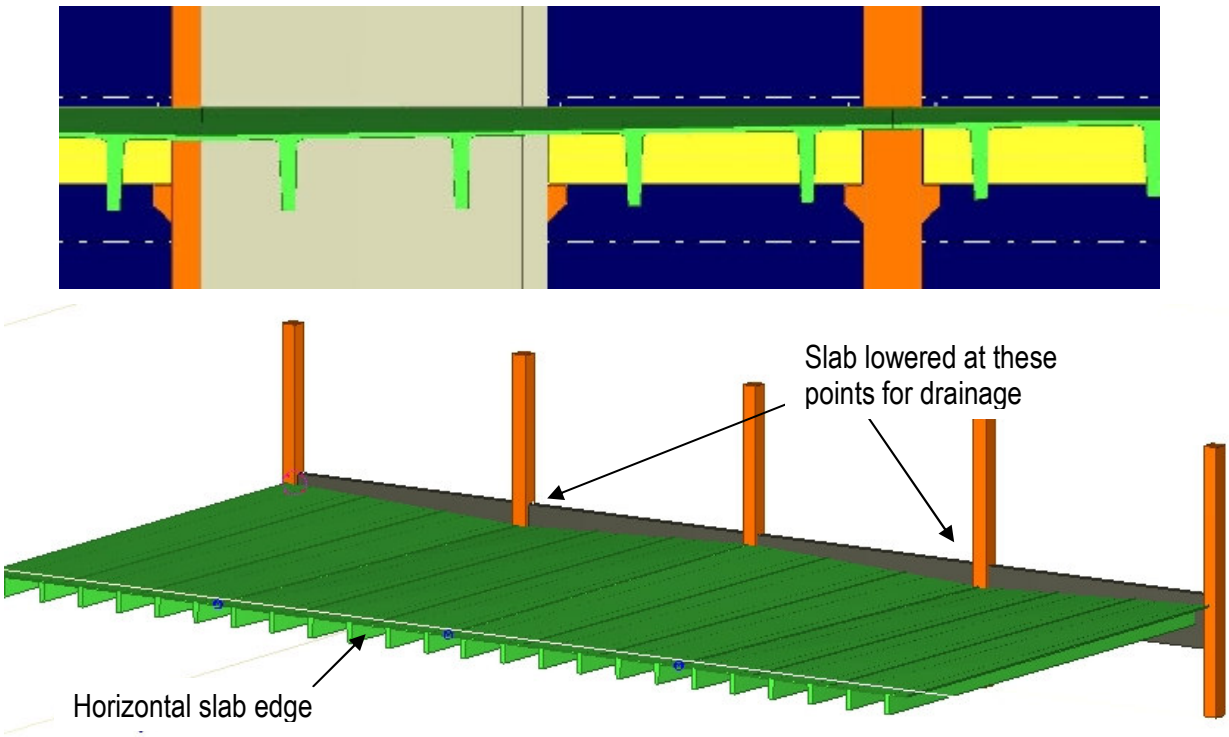

Figure 4. An assembly of warped double tees.

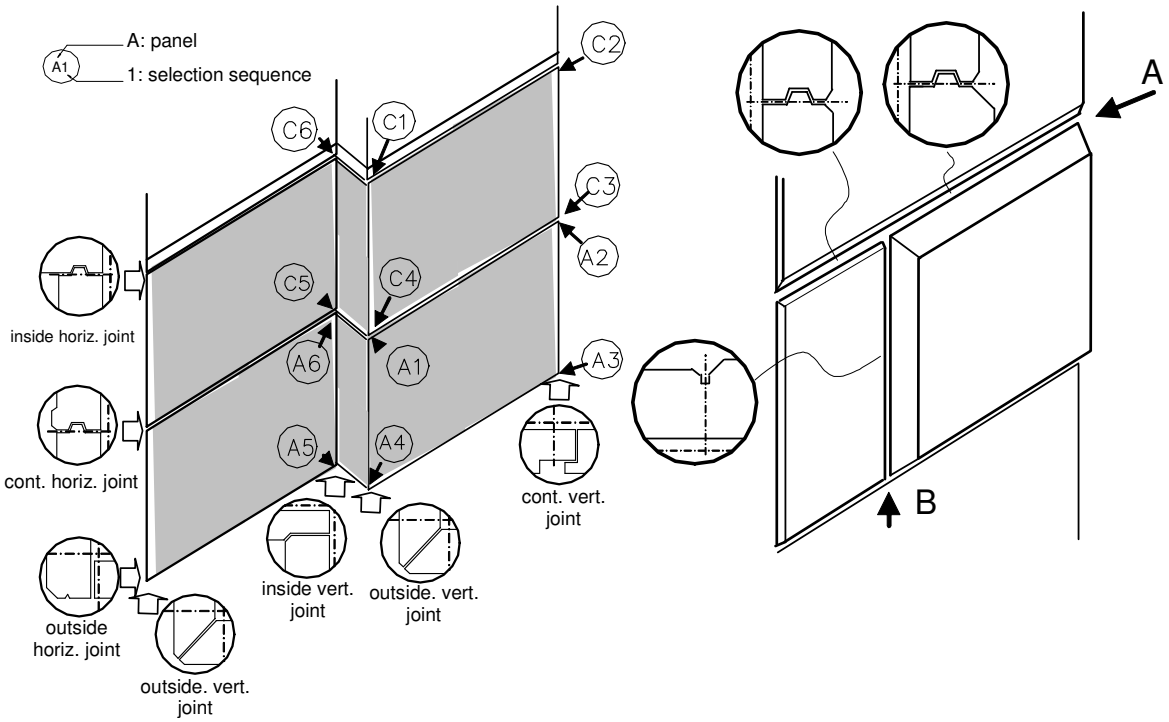

Figure 5. Façade panels are identified by selecting their joint boundaries, in order.

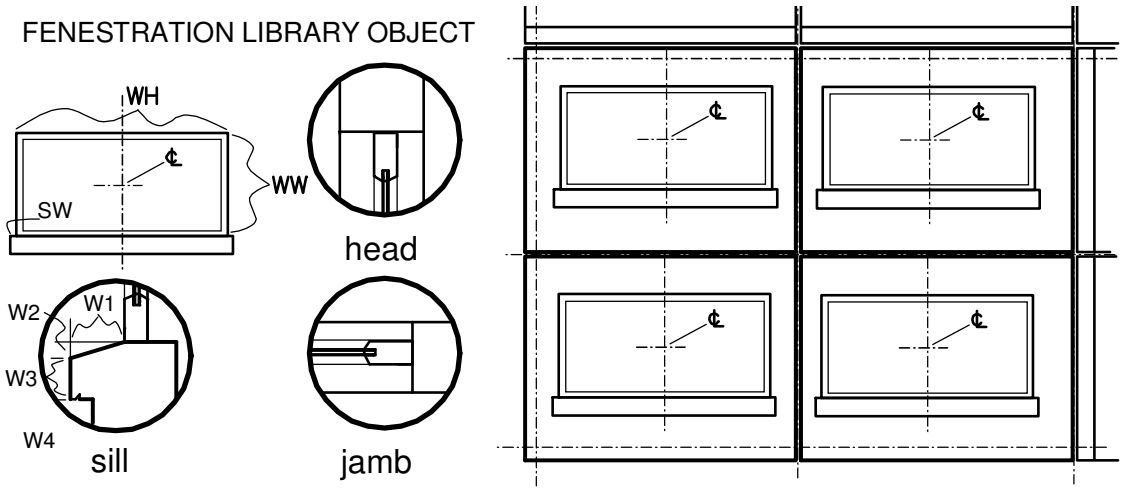

Figure 6. Windows are inserted from a parametric fenestration library defined for a project.

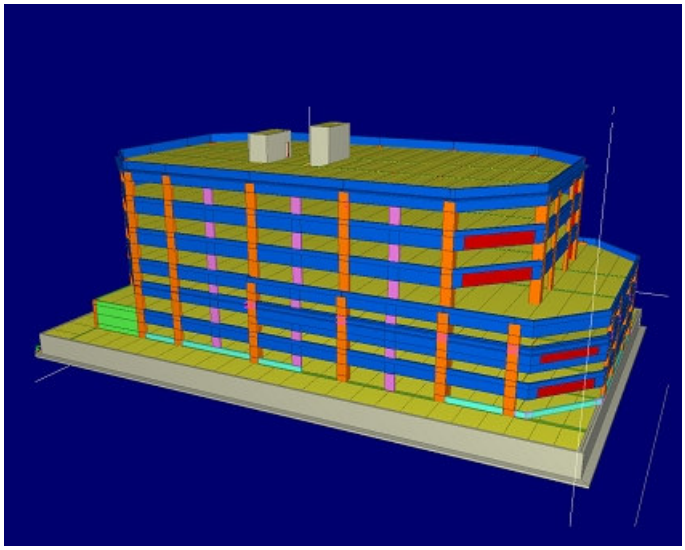

(a) 167,918 ft^2 (15,600 m^2) multi-level office building (PEN).

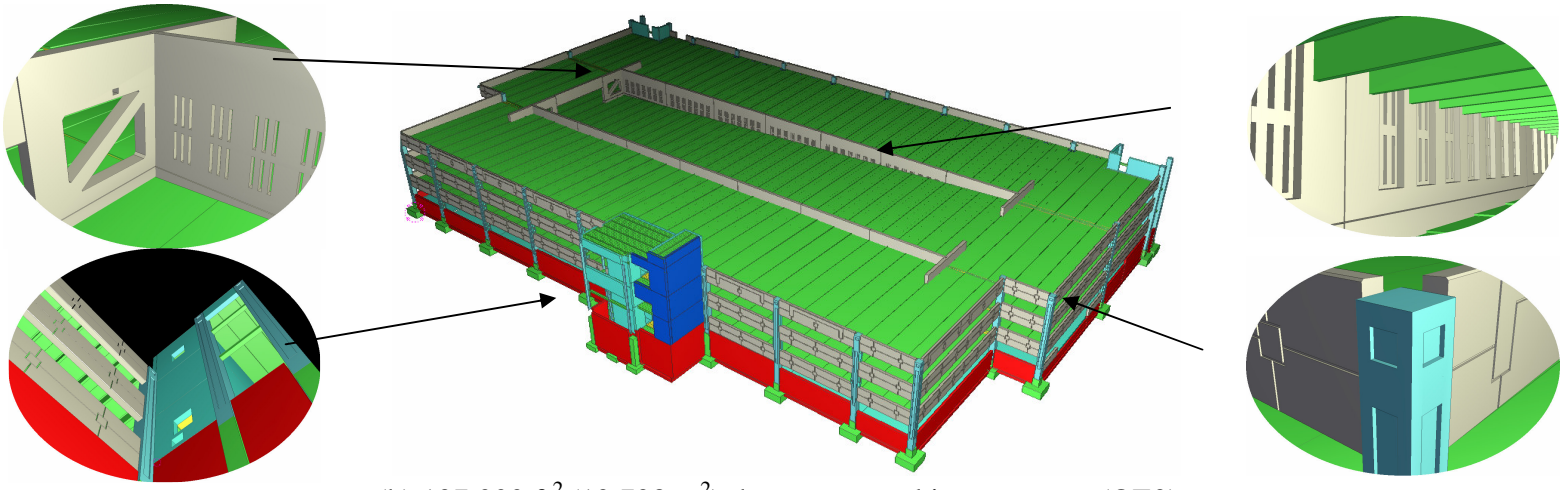

(b) 137,000 ft^2 (12,728 m^2) three story parking structure (QE2).

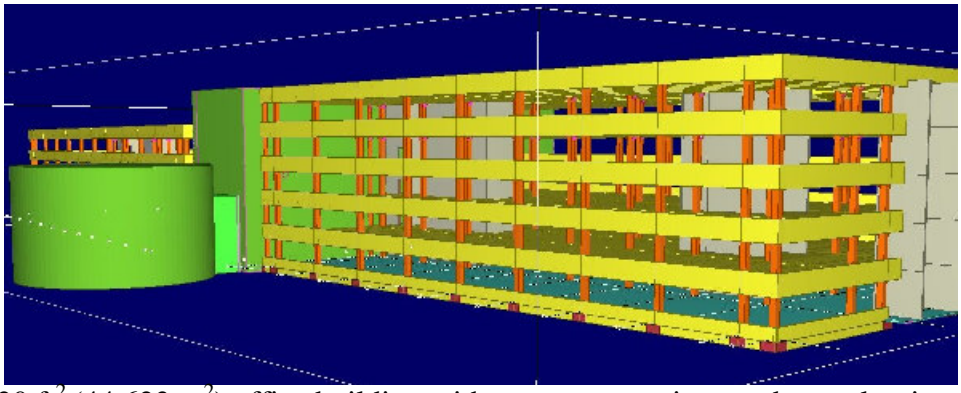

(c) 480,320 ft^2 (44,623 m^2) office building with two precast wings and a steel atrium structure (Y).

Figure 7. Precast buildings modeled by PCSC companies using BIM software